RoHS

REV.	ECN NO.	ECN LOGO.	DATE	SIGN	DESCRIPTION
A					

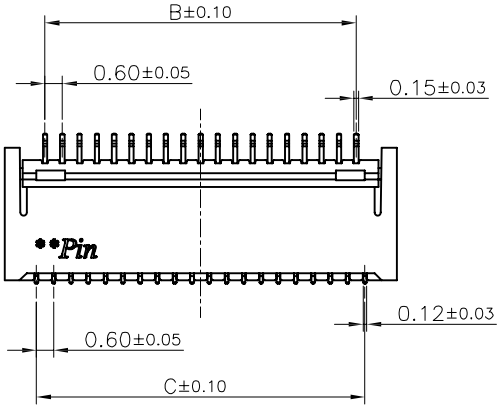

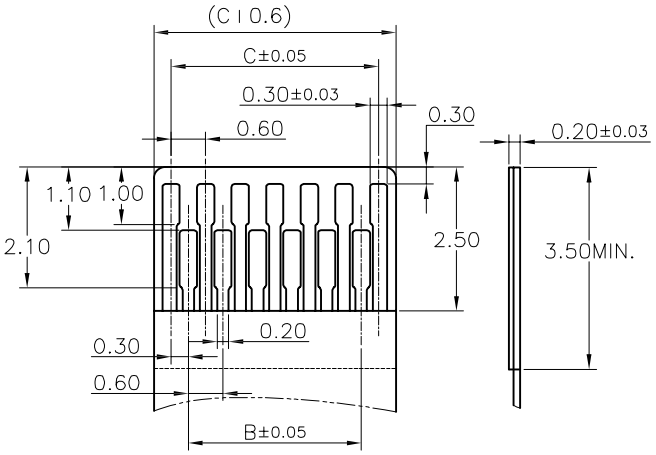

APPLICABLE FFC
TOLERANCE:±0.05
SCALE 2:1

NOTES:
1. MATERIAL:
   HOUSING: HIGHT-TEMP PLASTIC,UL 94V-0,
   COLOR:NATURE;
   SLIDER: HIGHT-TEMP PLASTIC,UL 94V-0,
   COLOR:BROWN;
   CONTACT: COPPER ALLOY;
2. PLATING:
   CONTACT: GOLD PLATED ON NICKEL OVERALL.
3. RATING:
   CURRENT RATING: 0.2A AC/DC
   VOLTAGE RATING: 50V AC/DC
   TEMPERATURE RANGE: -30°C~+85°C;
4. PART NO.(P/N.):
   F0300 - 0xx G x 0 M
   FPC SERIES
   PIN NO.
   G-GOLD FLASH OVER NICKEL
   PACKAGING
   1-TAPE&REEL
   3-TUBE

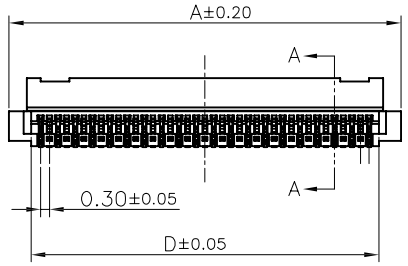

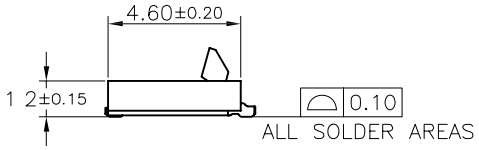

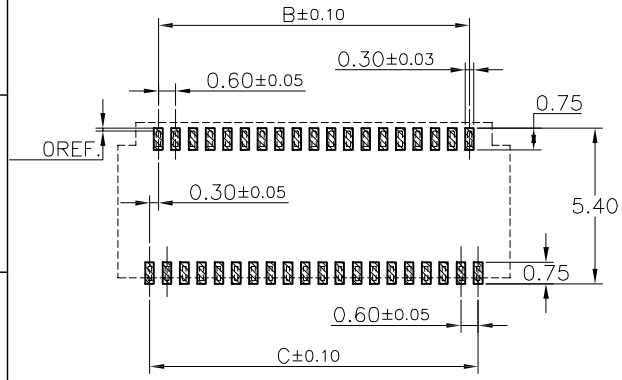

RECOMMEND PCB LAYOUT
TOLERANCE:±0.05

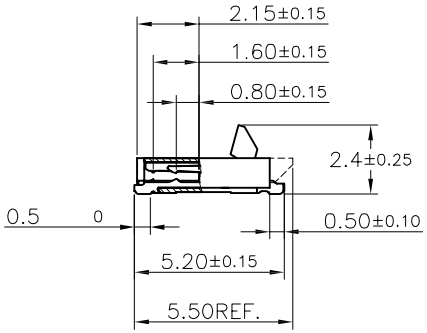

SECTION A-A

PIN NO.	DIM. A	DIM. B	DIM. C	DIM. D
13	5.80	3.00	3.60	4.27
17	7.00	4.20	4.80	5.47
21	8.20	5.40	6.00	6.67
23	8.80	6.00	6.60	7.27
25	9.40	6.60	7.20	7.87
27	10.00	7.20	7.80	8.47
31	11.20	8.40	9.00	9.67
33	11.80	9.00	9.60	10.27
35	12.40	9.60	10.20	10.87
39	13.60	10.80	11.40	12.07
41	14.20	11.40	12.00	12.67
45	15.40	12.60	13.20	13.87
51	17.20	14.40	15.00	15.67
61	20.20	17.40	18.00	18.67

TOLERANCE UNLESS SPECIFIED	
LINEAR	ANGLE
.X ±0.15	X° XX
.XX ±0.08	.X° XX
.XXX±0.02	.XX° XX

DATE 3/29'11	DAR. BY SC.Zhang	MATERIAL SEE NOTE1
SCALE 1:1	CHK. BY	FINISH ---
UNIT mm	APP. BY Nick	PART NO. ---

广瑞电子科技有限公司

TITLE: 0.3P 1.2H FPC W/COVER R/A SMT TYPE.-CUST. DWG

DWG NO. F0300 - 0xx G x 0 M

REV. A

RoHS

REV.	ECN.NO	DATE	SIGN	DESCRIPTION
A		8/16'11		RELEASED

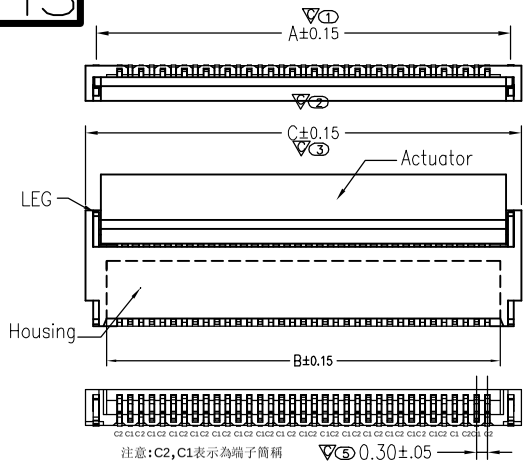

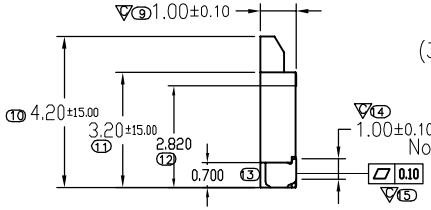

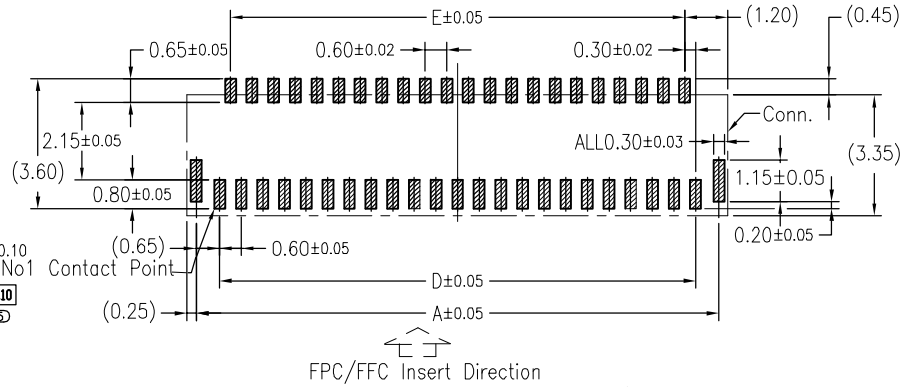

Recommended P.C.B Layout (C)

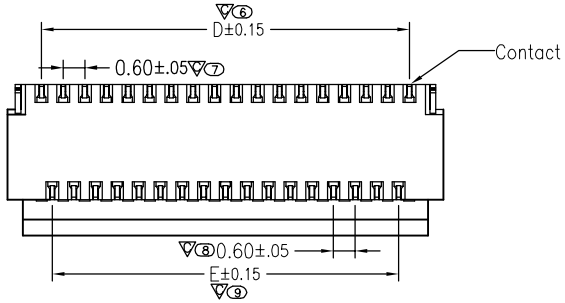

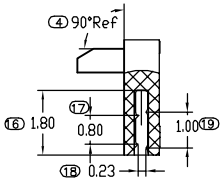

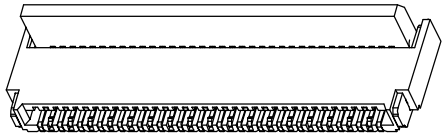

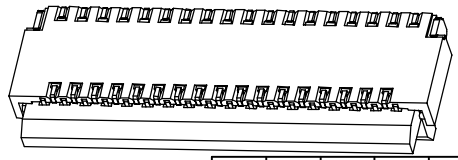

Note:

1.Material
- 1.1: Housing: LCP UL94-V0 Color:natural colour
- 1.2: Actuator: LCP UL94-V0 Color:natural colour
- 1.3: Contact: Phosphor Bronze.
- 1.4: LEG: Phosphor Bronze.

2.Plating
- 2.1: Contact: See Part Number.
- 2.2: LEG: Matte Tin Plating Over Nickel.

3.Rating:
- 3.1: Operating Voltage: 30V AC/DC.
- 3.2: Current Rating: 0.2A AC/DC.
- 3.3: Operating Temperature:-55°C~+85°C.

4.Pater Number:

FPC 03 11- xxRL-Tx x
- G=Gold flash 1=Au:1u"
- TA: Tape Rell Packing
- TU: Tube Packing
- Right Angle/Lower Contact Type
- NO. of contacts
- Series name
- Pitch=0.3mm
- FPC Series

5. Standard "▽" size of key control size

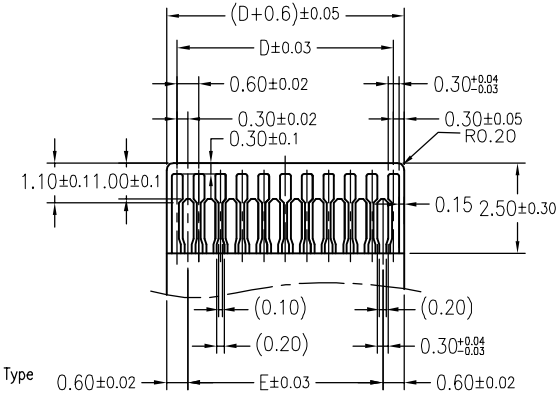

Applicable FPC

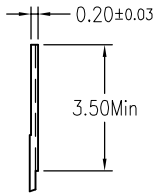

						41	13.30	12.70	13.90	12.00	11.40
7	3.10	2.50	3.70	1.80	1.20	43	13.90	13.30	14.50	12.60	12.00
9	3.70	3.10	4.30	2.40	1.80	45	14.50	13.90	15.10	13.20	12.60
11	4.30	3.70	4.90	3.00	2.40	47	15.10	14.50	15.70	13.80	13.20
13	4.90	4.30	5.50	3.60	3.00	49	15.70	15.10	16.30	14.40	13.80
15	5.50	4.90	6.10	4.20	3.60	51	16.30	15.70	16.90	15.00	14.40
17	6.10	5.50	6.70	4.80	4.20	53	16.90	16.30	17.50	15.60	15.00
19	6.70	6.10	7.30	5.40	4.80	55	17.50	16.90	18.10	16.20	15.60
21	7.30	6.70	7.90	6.00	5.40	57	18.10	17.50	18.70	16.80	16.20
23	7.90	7.30	8.50	6.60	6.00	59	18.70	18.10	19.30	17.40	16.80
25	8.50	7.90	9.10	7.20	6.60	61	19.30	18.70	19.90	18.00	17.40
27	9.10	8.50	9.70	7.80	7.20	63	19.90	19.30	20.50	18.60	18.00
29	9.70	9.10	10.30	8.40	7.80	65	20.50	19.90	21.10	19.20	18.60
31	10.30	9.70	10.90	9.00	8.40	67	21.10	20.50	21.70	19.80	19.20
33	10.90	10.30	11.50	9.60	9.00	69	21.70	21.10	22.30	20.40	19.80
35	11.50	10.90	12.10	10.20	9.60	71	22.30	21.70	22.90	21.00	20.40
37	12.10	11.50	12.70	10.80	10.20	73	22.90	22.30	23.50	21.60	21.00
39	12.70	12.10	13.30	11.40	10.80	75	23.50	22.90	24.10	22.20	21.60
PIN	A	B	C	D	E	PIN	A	B	C	D	E

TOLERANCE UNLESS SPECIFIED	
LINEAR	ANGLE
.X ±0.35	X° XX
.XX ±0.15	.X° ±2°
.XXX ±0.10	.XX° XX

DATE:8/16'11	DAR.BY:	MATERIAL: ---
SCALE: 1:1	CHK.BY:	FINISH: ---
UNIT: mm	APP.BY:	PART NO: ---

广瑞电子科技有限公司

TITLE: FPC 0.3Pitch 1.0H 前插后翻掀盖式

DWG NO. FPC0311-xxRL-TAG

REV. B